LONG SEAMS

COURSE	ORIENTATION
1(TOP)	90°
1	100°

*VERT – TOP TO BOTTOM

Ship loose items:

(1 SET): BOLTS, NUTS, AND GASKETS FOR ALL NOZZLES.

NOZ. A: (44) 7/8"- 10NC FULL THREADED STUD X 7" LG. (ZINC PLATED)
(88) 7/8"- 10NC HH NUT (ZINC PLATED)
(1 PC.) 1/8" THK x 38 1/4" OD X 35 1/2" ID (GARLOCK 3000)

NOZ. B: (12) 1"- 8NC FULL THREADED STUD X 6" LG. (ZINC PLATED)
(24) 1"- 8NC HH NUT (ZINC PLATED)
(1 PC.) 14" 150# RING GASKET X 1/8" THK (GARLOCK 3000)

NOZ. C: (8) 5/8"- 11NC HH BOLT X 3" LG. (ZINC PLATED)
(8) 5/8"- 11NC HH NUT (ZINC PLATED)
(1 PC.) 4" 150# RING GASKET X 1/8" THK (GARLOCK 3000)

NOZ. E: (12) 7/8"- 10NC HH BOLT X 5" LG. (ZINC PLATED)
(24) 7/8"- 10NC HH NUT (ZINC PLATED)
(1 PC.) 10" 150# RING GASKET X 1/8" THK (GARLOCK 3000)

NOZ. F: (44) 3/4"- 10NC HH BOLT X 7" LG. (ZINC PLATED)
(88) 3/4"- 10NC HH NUT (ZINC PLATED)
(1 PC.) 30" 150# RING GASKET X 1/8" THK (GARLOCK 3000)

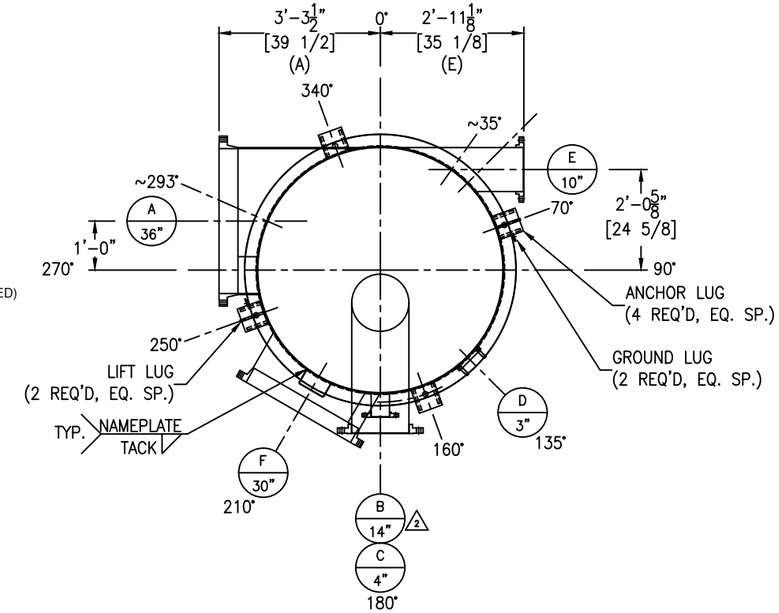

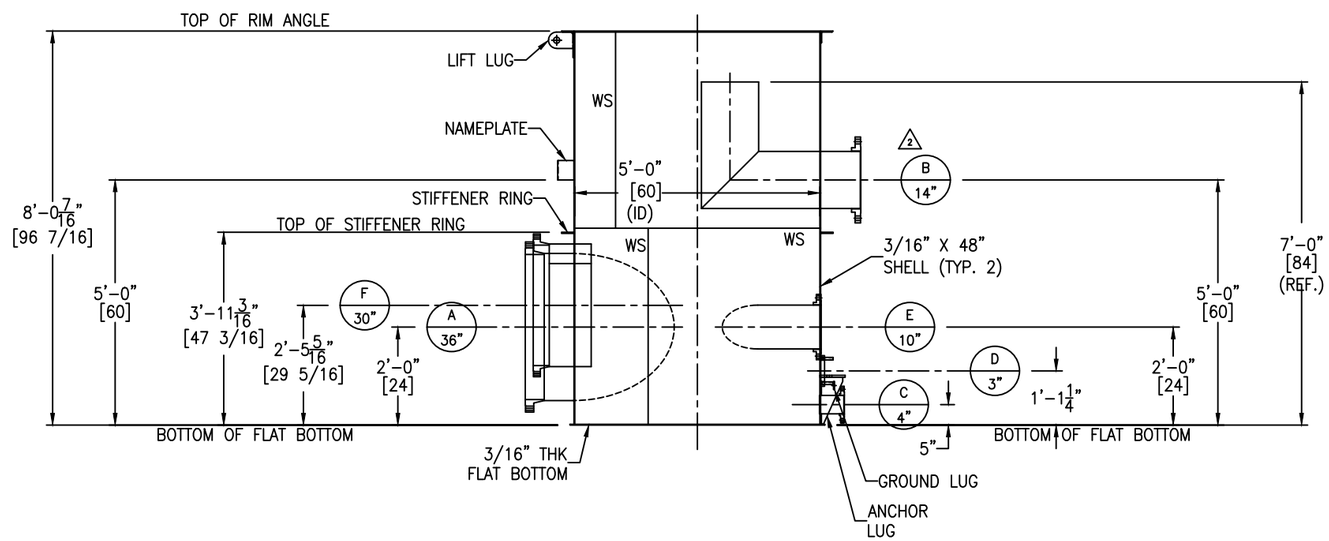

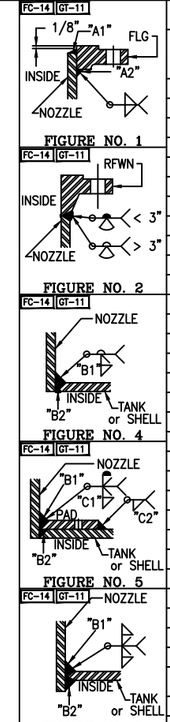

NOZZLE SCHEDULE

MARK	SERVICE	SIZE	RATING	TYPE / STYLE	NECK SCHED.	PROJECTION EXT. (E)	PROJECTION INT. (MIN.)	WELD FIGURE	REPAD SIZE (WIDTH X THK.)	WELD SIZE "A1"	"A2"	"B1"	"B2"	"C1"	"C2"
A	INLET FROM SEAL TANK	36"	150#	RFWN (16.47 SERIES B)	1/4"	SEE DWG	–	2,4	–	–	–	1/4	1/8	–	–
B	OVERFLOW	14"	150#	RFSO	10	9 13/16"	SEE DWG	1,7	–	1/4	1/4	1/4	1/4	–	–
C	DRAIN	4"	150#	RFSO	40S	5 13/16"	–	1,5	2" X 3/16" (DOGHOUSE)	1/4	1/4	1/4	1/8	3/16	3/16
D	LEVEL TRANSMITTER	3"	–	SCAB FLANGE	–	–	–	13	–	–	–	1/4	–	–	–
E	RECIRCULATION	10"	150#	RFSO	40S	SEE DWG	–	1,4	–	3/8	3/8	1/4	1/8	–	–
F	OUTLET	30"	150#	RFWN (16.47 SERIES B)	1/4"	10"	–	2,4	–	–	–	1/4	1/8	–	–

MATERIALS OF CONSTRUCTION

	VESSEL
SHELL	SA240-304/304L
FLAT BOTTOM	SA240-304/304L
RIM ANGLE	SA479-304/304L
NOZZLE NECKS	SA312-304/304L WLD & SA240-304/304L
NOZZLE FLANGES	SA182F-304/304L
MANWAY NECKS	–
MANWAY FLANGES	–
GASKETS	GARLOCK 3000 (SHIP LOOSE)
BOLTS/STUDS	SA193-B7 (ZINC PLATED) (SHIP LOOSE)
NUTS	SA194-2H (ZINC PLATED) (SHIP LOOSE)
REPADS	SA240-304/304L
COUPLINGS	–
SUPPORTS/HOLD DOWNS	SA240-304/304L
LIFTING LUGS	SA240-304/304L
STIFFENER RING	SA240-304/304L
INSULATION RINGS	–
GROUND LUG	SA240-304/304L
BAFFLE	–
LADDER	–
TANK CLIPS (LADDER)	–
HANDRAIL	–
HANDRAIL CLIPS	–
PLATFORM	–
PLATFORM CLIPS	–
DIPTUBE SUPPORT	–
JACKET SHELL	–
JACKET HEADS	–
JACKET NOZZLE NECKS	–
JACKET NOZZLE FLANGES	–

DESIGN DATA

	VESSEL
DESIGN AND FAB. CODE	API650
CERT. STAMP REQ'D.	NO
DESIGN PRESSURE	ATM
DESIGN TEMPERATURE	150° F
MIN. DESIGN METAL TEMP.	-20° F @ ATM
OPERATING PRESSURE	ATM
OPERATING TEMPERATURE	AMB
JOINT EFFICIENCY HEADS	0.70
JOINT EFFICIENCY SHELL	0.70
CORROSION ALLOWANCE	0"
SPECIFIC GRAVITY	1.0
EARTHQUAKE ZONE	Ss = (0.49) S1 = (0.13)
WIND LOAD	INDOOR
STRESS RELIEF	NOT REQ'D
RADIOGRAPHIC EXAM	NOT REQ'D
DYE PENETRANT EXAM	NOT REQ'D
MAGNETIC PARTICLE EXAM	NOT REQ'D
HYDROSTATIC TEST	NOT REQ,D
PNEUMATIC TEST	NOT REQ'D
WATER FILL TEST	FULL OF WATER
JKT CERT. STAMP REQ'D.	–
JKT DESIGN PRESSURE	–
JKT DESIGN TEMPERATURE	–
JKT MIN. DESIGN METAL TEMP.	–
JKT OPERATING PRESSURE	–
JKT OPERATING TEMPERATURE	–
JKT JOINT EFFICIENCY HEADS	–
JKT JOINT EFFICIENCY SHELL	–
JKT HYDRO TEST	–

VESSEL FINISH

INTERIOR WELD TREATMENT:	SAV TANK STANDARD
EXTERIOR WELD TREATMENT:	SAV TANK STANDARD
SAV TANK FINISHING STANDARD:	SEE NOTE 6
INSULATION:	N/A
PAINTING:	N/A

VESSEL CAPACITY AND WEIGHTS

OPERATING CAPACITY	1,058 GAL.
FULL CAPACITY	1,175 GAL.
EMPTY SHIPPING WEIGHT	2 2,950 LBS.
WEIGHT FULL OF WATER	2 12,750 LBS.
WEIGHT FULL OF PRODUCT	2 12,750 LBS.

QUALITY CONTROL

ENG. _____ DATE: _____

Q.C. _____ DATE: _____

This drawing is issued for customer approval. please review, make approval changes (if any) in red. check the appropriate box, sign & date.

- ☐ Approval – no changes. Please proceed with fabrication.
- ☐ Approved as noted. Please proceed with fabrication
- ☐ Not approved. Please make changes and resubmit.

Customer signature _____ Date _____

GENERAL NOTES

1.) COVER ALL FLANGES, OPENINGS & MACHINED SURFACES PRIOR TO SHIPMENT UNLESS OTHERWISE NOTED.
2.) BOLT HOLES TO STRADDLE 0° & 180° UNLESS OTHERWISE NOTED.
3.) NOZZLE REPADS TO HAVE (1) ø1/4" TELL-TALE HOLES ON HORIZONTAL CENTER LINE.
ALL OTHER REPADS TO HAVE (1) ø1/4" WEEP HOLE AT LOWEST POINT ON PAD.
4.) MANUFACTURING TOLERANCE TO BE IN ACCORDANCE WITH API STANDARD 650 7.5.
5.) ASME MATERIALS TO CONFORM TO THE FOLLOWING: FLANGES – B16.5, 16.47 (SERIES B) FITTINGS – B16.9 & COUPLINGS – B16.11.
6.) PICKLE ALL EXTERIOR WELDS. PASSIVATE INTERIOR & EXTERIOR OF VESSEL.

REVISIONS

REV	D.BY	C.BY	DATE	DESCRIPTION
				AS BUILT
2	AD	RS	3/31/26	CERTIFIED
1	AD	RS	2/18/26	APPROVAL REV 1
0	AD	RS	1/19/26	APPROVAL

Savannah Tank & Equipment Corp.
1517 Telfair Road, Savannah, GA 31415
(912) 233-8902

DRAWN BY: AD
CHK'D BY: RS
APPROVED BY: NP
SCALE: 1/2" = 1'-0"

SYLVAMO
SEAL TANK STAND PIPE
EQUIP. #472-5-3584-00B
CUST. PO #S0769C8106

DRAWING NO.: 357-25-1 SHT 1 OF 3 REV. SET 2

FC-14

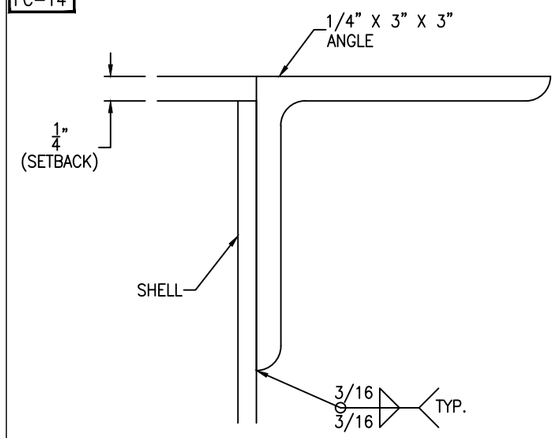

RIM ANGLE DETAIL

SCALE: 1'-0" = 1'-0"

FC-14

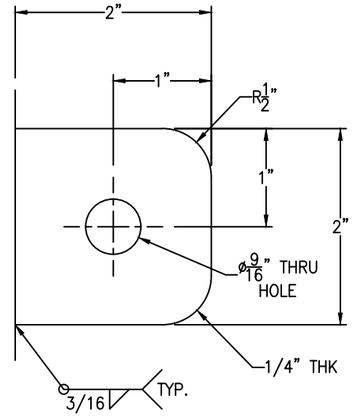

GROUND LUG IS LOCATED @ 70° & 250°

GROUND LUG DETAIL

(2 REQ'D) SCALE: 1'-0" = 1'-0"

FC-14 GT-11

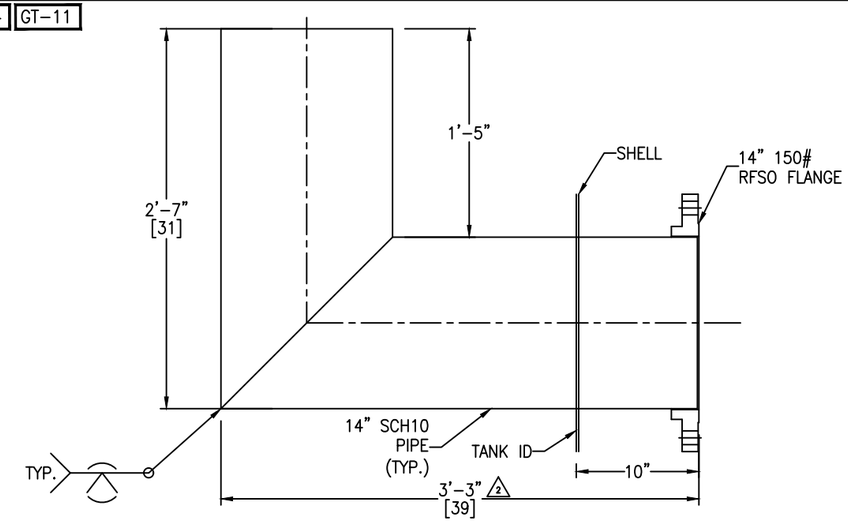

NOZZLE B DETAIL

SCALE: 1 1/2" = 1'-0"

FC-14

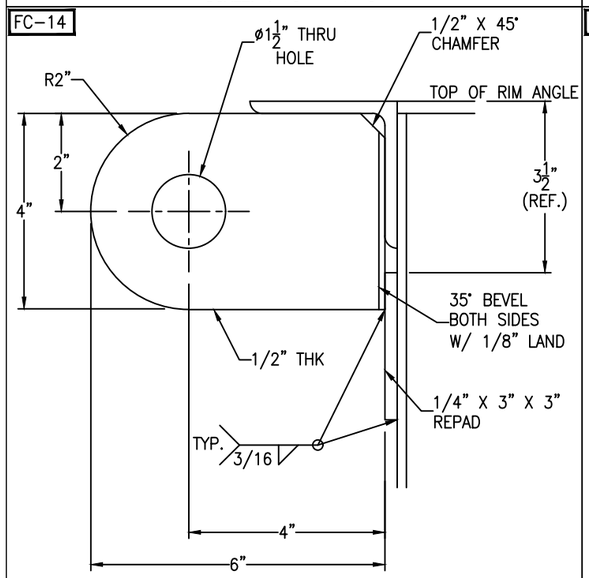

TANK WT. <= 5000#
SHACKLE PIN DIA. = 1"

LIFT LUG DETAIL

(2 REQ'D) SCALE: 6" = 1'-0"

FC-14

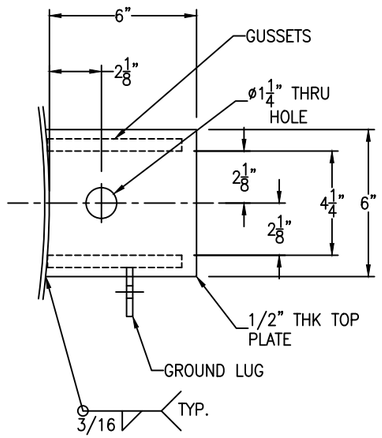

FC-14

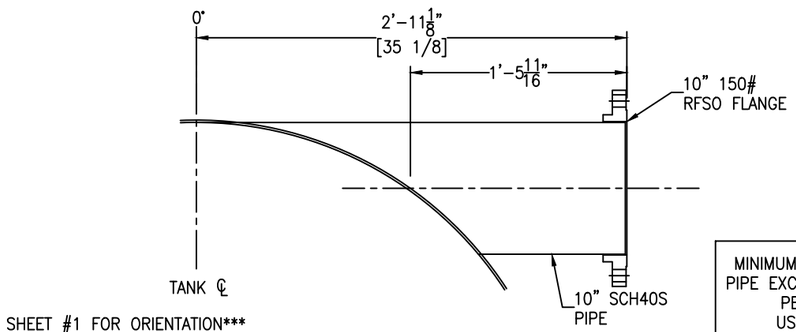

SEE SHEET #1 FOR ORIENTATION

MINIMUM THICKNESS REQUIRED FOR THE PIPE EXCEEDS SCH10 PIPE THICKNESS AS PER API 650 CALCULATIONS. USING SCH40S PIPE INSTEAD. PLEASE CONFIRM

NOZZLE E DETAIL

SCALE: 1 1/2" = 1'-0"

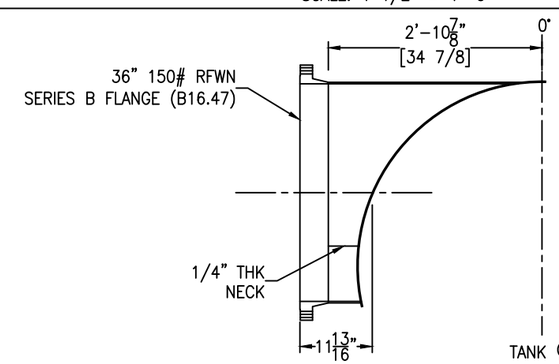

SEE SHEET #1 FOR ORIENTATION

NOZZLE A DETAIL

SCALE: 3/4" = 1'-0"

FC-14

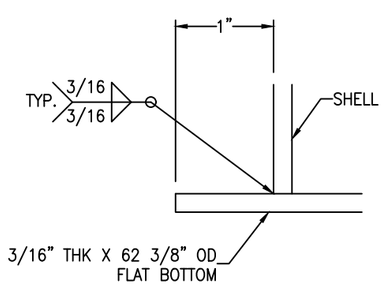

FLAT BOTTOM DETAIL

SCALE: 1'-0" = 1'-0"

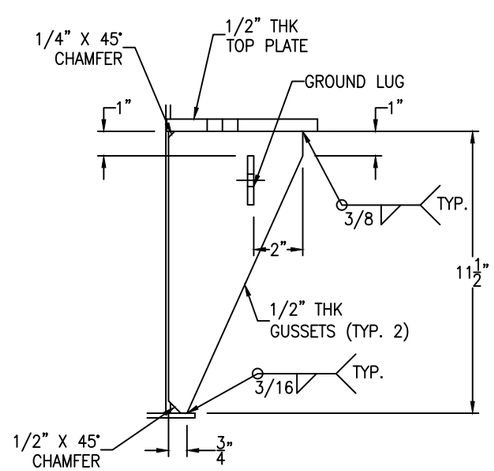

ANCHOR LUG DETAIL

(4 REQ'D) SCALE: 3" = 1'-0"

REV	D.BY	C.BY	DATE	DESCRIPTION
				AS BUILT
2	AD	RS	3/31/26	CERTIFIED
1	AD	RS	2/18/26	APPROVAL REV 1
0	AD	RS	1/19/26	APPROVAL

⚠1 REVISIONS

Savannah Tank & Equipment Corp.
1517 Telfair Road, Savannah, GA 31415
(912) 233-8902

DRAWN BY: AD
CHK'D BY: RS
APPROVED BY: NP
SCALE: 1/2" = 1'-0"

SYLVAMO
SEAL TANK STAND PIPE
EQUIP. #472-5-3584-00B
CUST. PO #S0769C8106

DRAWING NO.: 357-25-1 SHT 2 OF 3 REV. SET 2

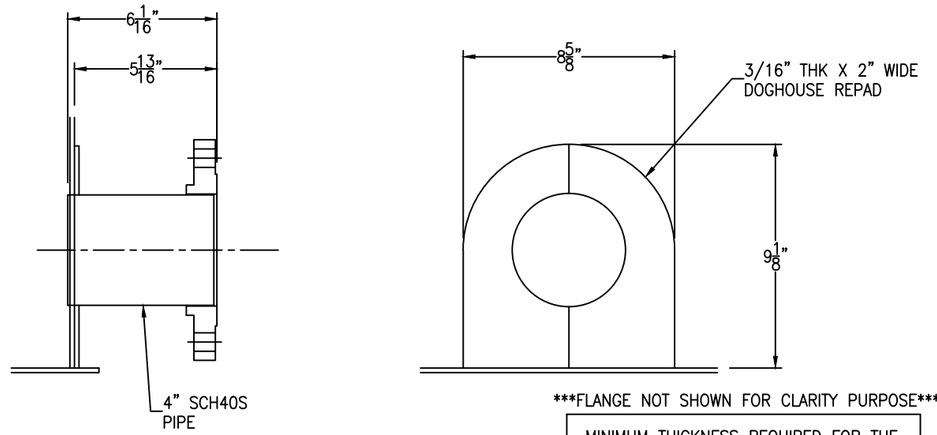

FLANGE NOT SHOWN FOR CLARITY PURPOSE

MINIMUM THICKNESS REQUIRED FOR THE PIPE EXCEEDS SCH10 PIPE THICKNESS AS PER API 650 CALCULATIONS. USING SCH40S PIPE INSTEAD. PLEASE CONFIRM

NOZZLE C DETAIL

SCALE: 3" = 1'-0"

FC-14

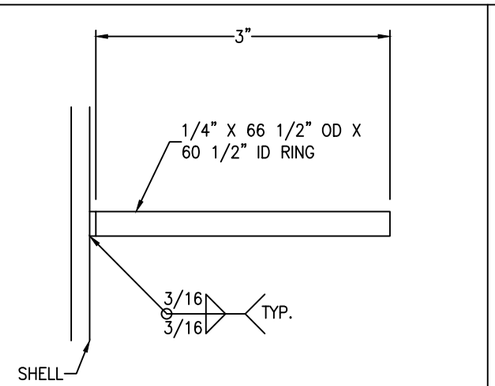

SEE SHEET #1 FOR ELEVATION

STIFFENER RING DETAIL

SCALE: 1'-0" = 1'-0"

FC-14

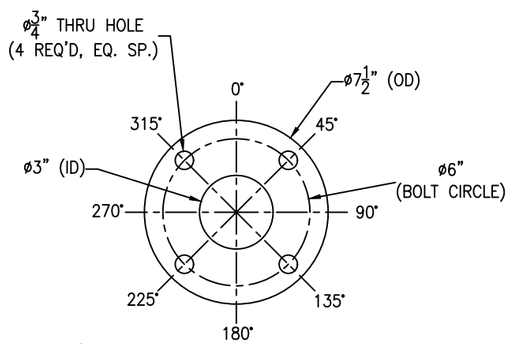

SCAB FLANGE DETAIL

SCALE: 3" = 1'-0"

Bolting for SCAB FLANGE
D: (4) 5/8"-11 NC x 3" FULL THREADED STUD
(CUT LENGTH AS REQUIRED TO MATCH DRAWING)

REV	D.BY	C.BY	DATE	DESCRIPTION
				AS BUILT
2	AD	RS	3/31/26	CERTIFIED
1	AD	RS	2/18/26	APPROVAL REV 1
0	AD	RS	1/19/26	APPROVAL

△1 REVISIONS

Savannah Tank & Equipment Corp.
1517 Telfair Road, Savannah, GA 31415
(912) 233-8902

DRAWN BY: AD
CHK'D BY: RS
APPROVED BY: NP
SCALE: 1/2" = 1'-0"

SYLVAMO
SEAL TANK STAND PIPE
EQUIP. #472-5-3584-00B
CUST. PO #S0769C8106

DRAWING NO.: 357-25-1 | SHT 3 OF 3 | REV. SET 2